Kamado Outdoor Oven and BBQ

User Instructions - Please keep for future reference

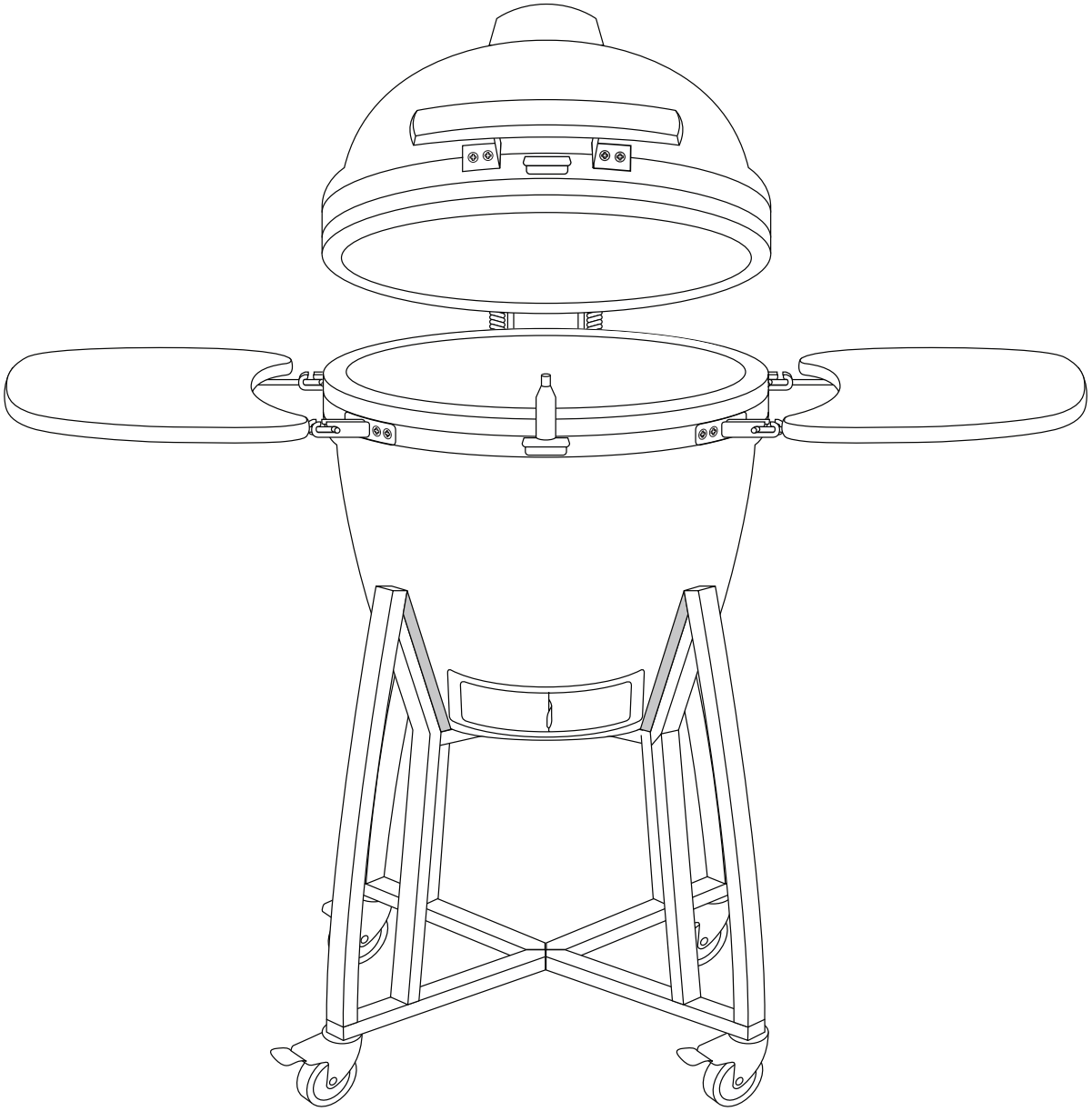

User Instructions - Please keep for future reference

IMPORTANT Ð Carefully remove any packaging before use, but retain the safety instructions.
These instructions form part of the product.
Please take note of all of the safety warnings listed in these instructions.
Please read these instructions in their entirety and retain them for future reference.
These instructions should be stored with the product.
This product is for domestic use **ONLY** and should not be used commercially or for contract purposes.

Care and safe use guidelines

ABOUT YOUR KAMADO

Dating back 4000 years ago archaeologists have discovered large clay vessels thought to be early incarnations of the Kamado ceramic cooker. Since then it has evolved in many ways; removable lid, added draft door for better heat control and the switch from wood to charcoal as the primary fuel. In Japan the Mushikamado was a round clay pot with a removable domed lid designed for steaming rice. The name 'Kamado' is, in fact, the Japanese word for 'stove' or 'cooking range'. This name was adopted by the Americans and has now become a generic term for this style of ceramic cooker.

Kamado cookers are extremely versatile. Not only can they be used for grilling or smoking but also pizzas, bread, pies and cookies can be baked effortlessly inside them. Due to their excellent heat retention properties, high temperatures can be achieved and maintained by precise control of airflow via the top and bottom vents. High temperatures are ideal for fast cooking burgers and sausages whilst low heats will cook larger joints over a longer period of time. Why not try adding some wood chips to the charcoal or try combining different flavour wood chips to make your meats even more flavoursome.

WARNINGS – CAUTION!

- **This product is intended FOR OUTDOOR USE ONLY. DO NOT use indoors.**
- **ALWAYS keep children and pets at a safe distance from the oven when in use.**
- **NEVER leave a burning fire unattended.**
- **DANGER of carbon monoxide poisoning – NEVER light this product or let it smoulder or cool down in confined spaces.**
- **DO NOT use this product in a tent, caravan, car, cellar, loft or boat.**
- **DO NOT use under any awnings, parasols or gazebos.**
- **FIRE HAZARD – Hot embers may emit while in use.**
- **CAUTION - DO NOT use petrol, white spirit, lighter fluid, alcohol or other similar chemicals for lighting or relighting. Use only firelighters complying to EN1860-3.**
- **It is highly recommended that you use lump charcoal in your Kamado. It burns for longer and produces less ash which can restrict the airflow.**
- **DO NOT use coal in this product.**
- **IMPORTANT: When opening the lid at high temperatures it is essential to lift the lid only slightly, allowing air to enter slowly and safely, preventing any backdraft or flare-ups that may cause injury.**
- **ALWAYS follow the FOOD COOKING INFORMATION stated on page 4 of this instruction manual.**
- **DO NOT use the Kamado on decking or any other flammable surfaces such as dry grass, wood chips, leaves or decorative bark.**
- **Ensure that the Kamado is positioned at least 2 metres away from flammable items.**
- **DO NOT use this Kamado as a furnace.**
- **ATTENTION: This product will become very hot, DO NOT move it during operation.**
- **ALWAYS USE heat resistant gloves when handling hot ceramics or cooking surfaces.**
- **Allow the unit to cool down completely before moving or storing.**
- **Always inspect the unit prior to use for fatigue and damage and replace as and when necessary.**

CURING THE KAMADO

- To start a fire place rolled up newspaper with some lighter cubes or solid firelighters on the charcoal plate (7) in the base of the Kamado. Then place 2 or 3 handfuls of lump charcoal over the top of the newspaper.
- **DO NOT** use petrol, white spirit, lighter fluid, alcohol or other similar chemicals for lighting or relighting.
- Open the bottom vent and light the newpaper using a long nosed lighter or safety matches.
- **DO NOT** overload the unit with fuel – if the fire is too intense this could damage the Kamado.
- Leave until all the fuel is used and extinguished.
- If the first burns are too high it could damage the felt gasket seal before it has had the chance to mature properly.
- After first use inspect all fasteners for tightness. The metal band connecting your lid to the base will expand from the heat and this could become loose. It is recommended you check and if neccessary tighten the band with a spanner.
- You can now use your Kamado as normal.

EXTINGUISHING

- To extinguish unit – stop adding fuel and close all the vents and the lid to allow the fire to die natuarally.
- **DO NOT** use water to extinguish the charcoals as this could damage the ceramic Kamado.

Care and safe use guidelines

STORAGE

- When not in use, and if stored outside, cover the Kamado once completely cooled with a suitable rain cover.
- The chrome plated cooking grill is **NOT** dishwasher safe; use a mild detergent with warm water.
- When using the Kamado push down on both of the locking wheels to stop the unit moving about during use.
- It is recommended the Kamado be stored under cover in a garage or shed over winter for complete protection.

CLEANING

- The Kamado is self cleaning. Heat it up to 260ºC for 30 minutes and it will scorch off all of the food and debris.
- **DO NOT** use water or any other types of cleaning product to clean the inside of your Kamado. The walls are porous and will absorb any fluids used, this could cause the Kamado to crack. If the soot becomes excessive then use a wire brush or the ash tool (not supplied) to scrape off the carbon remnants before the next use.
- To clean the grills and grates use a non-abrasive cleaner once the unit has fully cooled.
- To clean the outer surface wait until the Kamado is cool and use a damp cloth with a mild detergent.

MAINTENANCE

- Tighten the bands and oil the hinge 2 times a year or more if needed.

LIGHTING, USAGE AND CARE INFORMATION

- Ensure the Kamado is positioned on a permanent, flat, level, heat resistant non-flammable surface away from flammable items.
- Ensure the Kamado has a minimum of 2m overhead clearance and has a minimum 2m clearance from other surrounding items.
- To start a fire place rolled up newspaper with some lighter cubes or solid firelighters on the charcoal plate (7) in the base of the Kamado. Then place 2 or 3 handfuls of lump charcoal over the top of the newspaper. Maximum amount of lump charcoal: 1.2kg.
- **DO NOT** use petrol, white spirit, lighter fluid, alcohol or other similar chemicals for lighting or relighting.
- Open the bottom vent and light the newpaper using a long nosed lighter or safety matches. Once it has caught, leave the bottom vent and lid open for about 10 minutes to build a small bed of hot embers.
- Allow the charcoal to heat up and be kept red hot for at least 30 minutes prior to the first cooking on the kamado. **DO NOT** cook before the fuel has a coating of ash.
- It is recommended you don't stoke or turn the coals once they are alight. This allows the charcoals to burn more uniformly and efficiently.
- Once alight **ONLY** use heat resistant gloves when handling hot ceramics or cooking surfaces.
- See below for cooking instuctions depending on temperature and duration.

LOW TEMPERATURE COOKING GUIDE

- Light the lump charcoal according to the the instructions above. **DO NOT** move or stoke the coals once lit.
- Open the bottom vent fully and leave the lid open for about 10 minutes to build a small bed of hot embers.
- Monitor the Kamado until it has risen to the desired temperature. See page 4 for a temperature cooking guide.
- Fully close the bottom vent to maintain the temperature.
- You are now ready to use the Kamado for cooking on.
- **IMPORTANT:** When opening the lid at high temperatures it is essential to lift the lid only slightly, allowing air to enter slowly and safely, preventing any backdraft or flare-ups that may cause injury.
- **ALWAYS** follow the **FOOD COOKING INFORMATION** stated on page 4 of this instruction manual.
- **ALWAYS** use heat resistant gloves when handling hot ceramics or cooking surfaces.

SMOKING GUIDE

- Follow the instructions above as if you were starting a slow cook.
- Monitor the Kamado until it has risen to the desired temperature. See page 4 for a temperature cooking guide.
- Leave the bottom vent slightly open.
- Close the top vent and continue to check the temperature for a few more minutes.
- Using heat resistant gloves sprinkle the wood chips in a circle over the hot charcoal.
- You are now ready to use the Kamado to smoke on.
- **TIP:** Soak your wood chips or cooking planks in water for 15 minutes to prolong the smoking process.
- **IMPORTANT:** When opening the lid at high temperatures it is essential to lift the lid only slightly, allowing air to enter slowly and safely, preventing any backdraft or flare-ups that may cause injury.
- **ALWAYS** follow the **FOOD COOKING INFORMATION** stated on page 4 of this instruction manual.
- **ALWAYS** use heat resistant gloves when handling hot ceramics or cooking surfaces.

HIGH TEMPERATURE COOKING GUIDE

- Light the lump charcoal according to the the instructions on page 3.
- Close the lid and fully open the top and bottom vents.
- Monitor the Kamado until it has risen to the desired temperature. See page 4 for a temperature cooking guide.
- Close the top vent half way and continue to check the temperature for a few more minutes.
- You are now ready to use the Kamado for cooking on.
- **IMPORTANT:** When opening the lid at high temperatures it is essential to lift the lid only slightly, allowing air to enter slowly and safely, preventing any backdraft or flare-ups that may cause injury.
- **ALWAYS** follow the **FOOD COOKING INFORMATION** stated on page 4 of this instruction manual.
- **ALWAYS** use heat resistant gloves when handling hot ceramics or cooking surfaces.

FOOD COOKING INFORMATION

- **DO NOT** cook until the fuel has a coating of ash.
- Please read and follow this advice when cooking on your Kamado.
- Always wash your hands before and after handling uncooked meat and before eating.
- Always keep raw meat away from cooked meat and other foods.
- Before cooking ensure grill surfaces and tools are clean and free of old food residues.
- **DO NOT** use the same utensils to handle cooked and uncooked foods.
- Ensure all meat is cooked thoroughly before eating.
- **CAUTION** – eating raw or under cooked meat can cause food poisoning (e.g. bacteria strains such as E.coli).
- To reduce the risk of under cooked meat cut open to ensure it is cooked all the way through.
- **CAUTION** – if the meat has been cooked sufficiently the meat juices should be clear and there should be no traces of pink/red juice or meat colouring.
- Pre-cooking larger pieces of meat and joints is recommended before finally cooking on your grill.
- After cooking on your Kamado always clean the grill cooking surfaces and utensils.

REFUELLING

- With the vents closed, the Kamado stays at a high temperature for several hours. If you require a longer cooking time (e.g when roasting a whole joint or slow smoking), it may be necessary to add more charcoal. Just add some additional charcoal and continue as above.

COOKING TEMPERATURE GUIDE

Slow cook / Smoke (110ºC-135ºC)		Top vent	Bottom vent
Beef Brisket	2 Hrs per lb.		
Pulled Pork	2 Hrs per lb.		
Whole Chicken	3-4 Hr.		
Ribs	3-5 Hrs.		
Roasts	9+ Hrs.		

Grill / Roast (160ºC-180ºC)		Top vent	Bottom vent
Fish	15-20 Min.		
Pork Tenderloin	15-30 Min.		
Chicken Pieces	30-45 Min.		
Whole Chicken	1-1.5 Hrs.		
Leg of lamb	3-4 Hrs.		
Turkey	2-4 Hrs.		
Ham	2-5 Hrs.		

Sear (260ºC-370ºC)		Top vent	Bottom vent
Steak	5-8 Min.	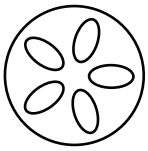	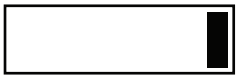
Pork Chops	6-10 Min.		
Burgers	6-10 Min.		
Sausages	6-10 Min.		

Open ○ Closed ●

Parts list

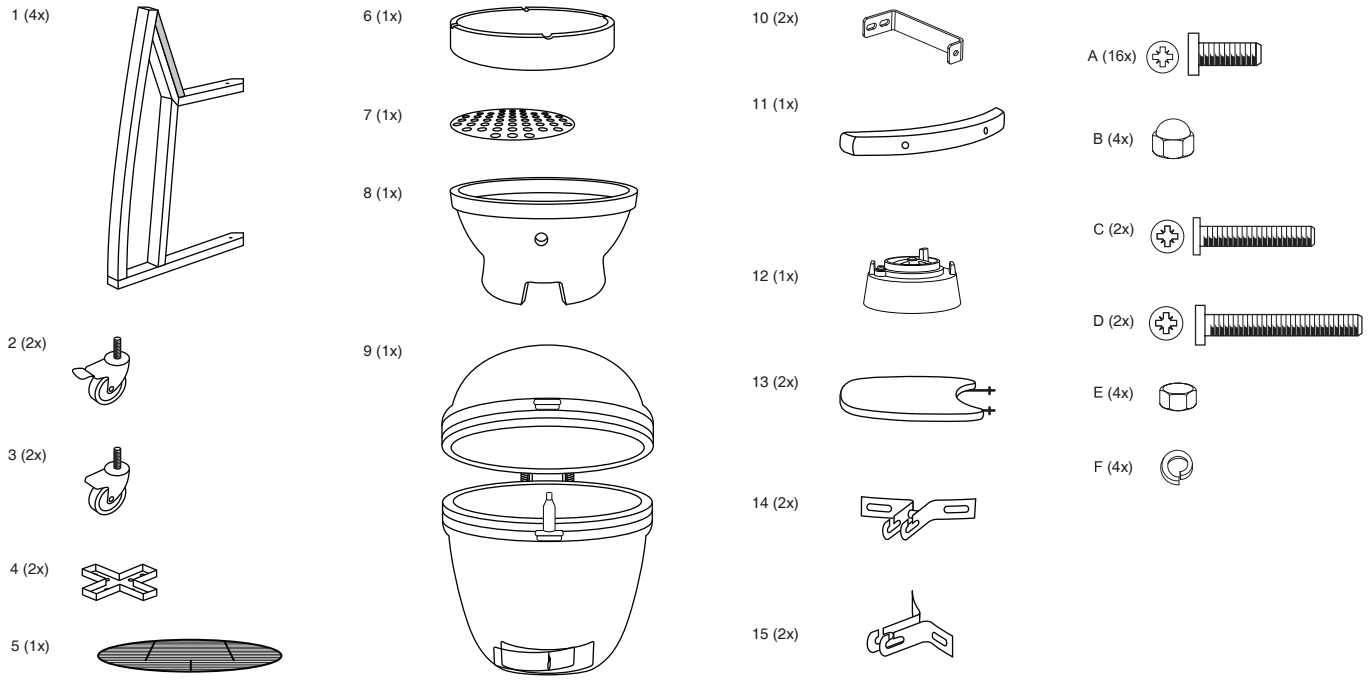

Prior to assembly, read the instructions carefully. Check all parts against the parts list.
Carry out assembly on a soft surface to avoid scratching the paint. Please retain this information for future reference.

For ease of assembly only loosely tighten bolts and then tighten fully when assembly is complete.

WARNING - DO NOT over tighten bolts; only tighten with moderate pressure to avoid damaging the bolts or components of the Kamado Grill.

Assembly instructions

IMPORTANT - Remove any packaging before use, but retain the safety instructions and store them with this product. Ensure that the lid is closed prior to assembly.

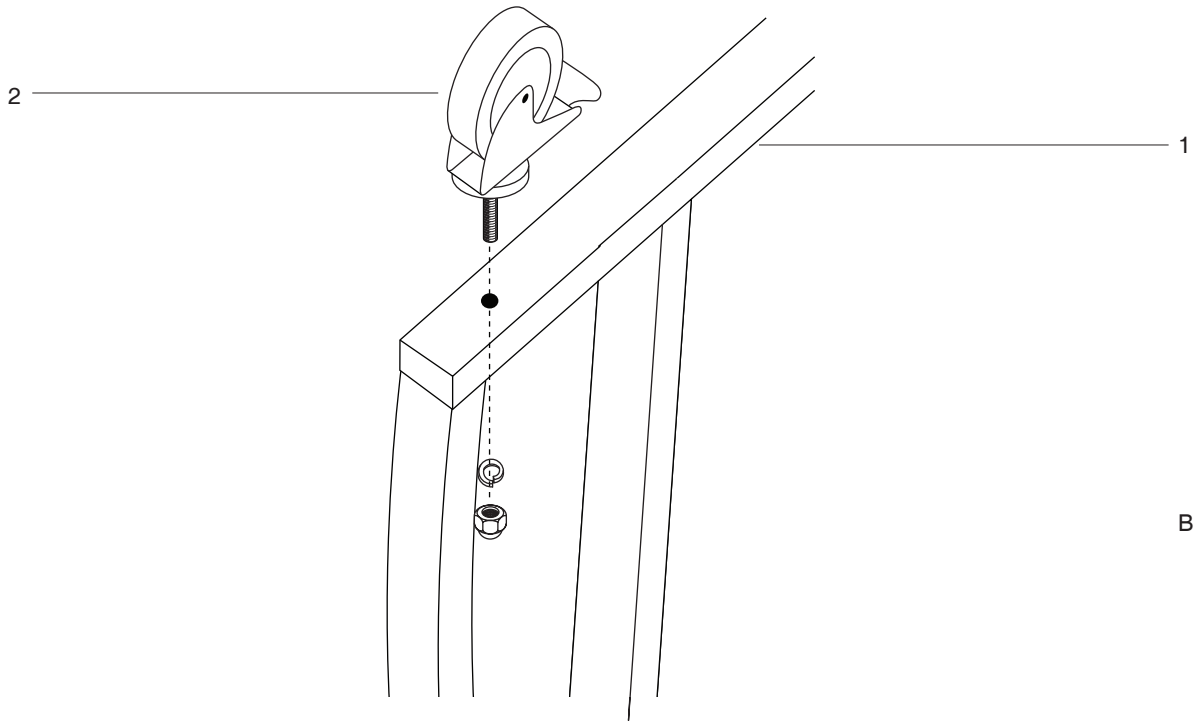

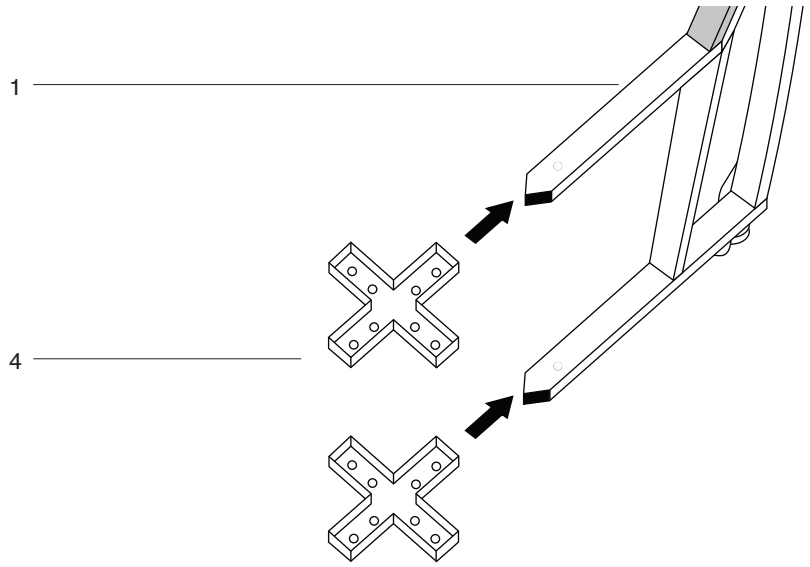
1
4

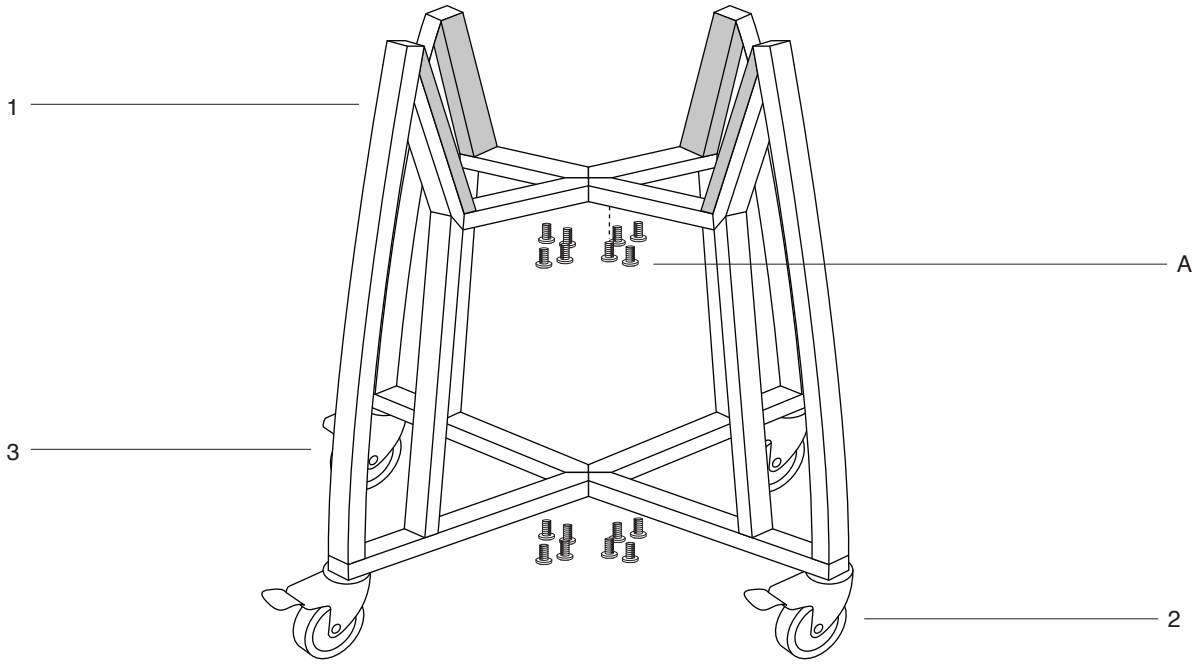
1
A
3
2

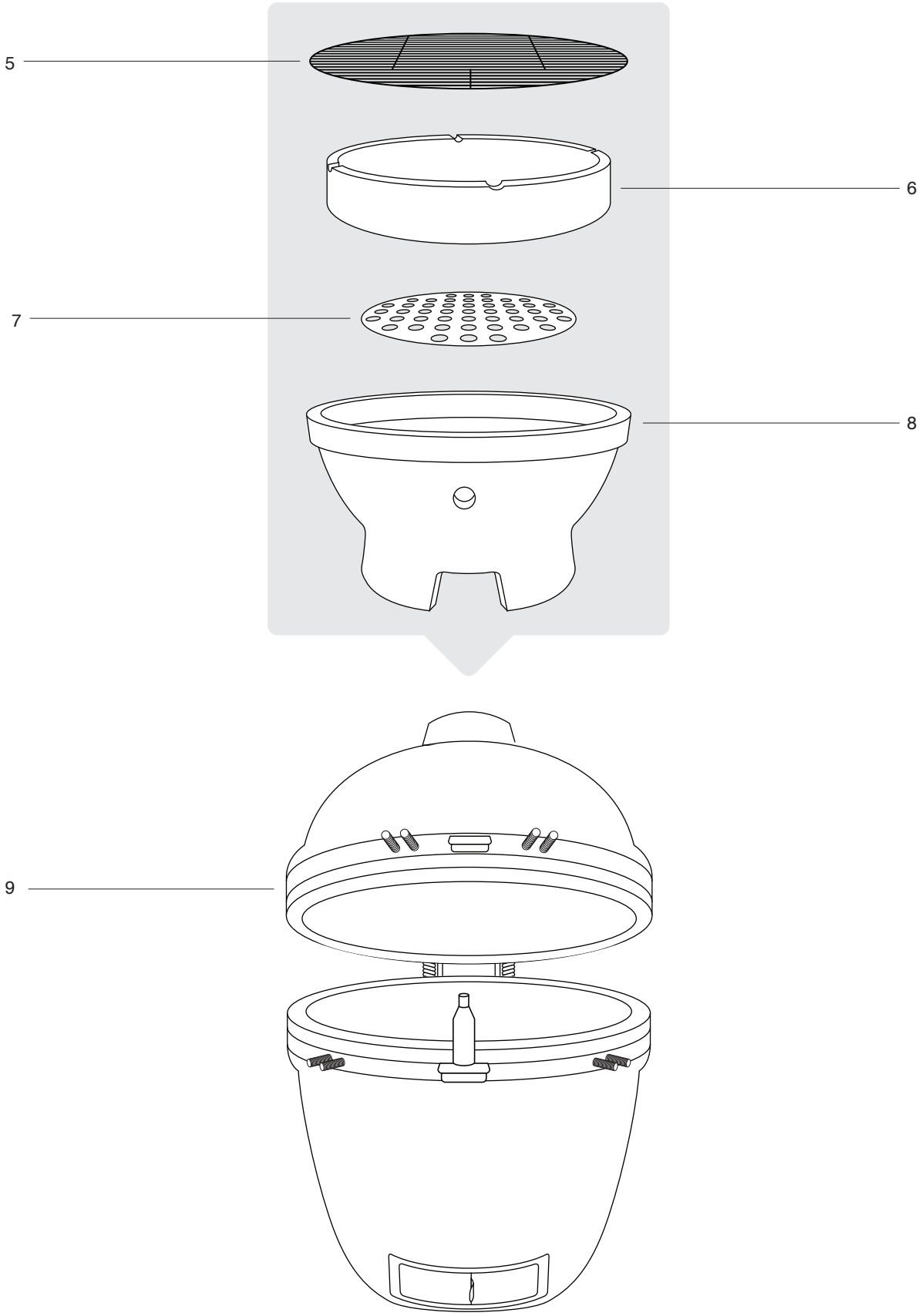
5
6
7
8
9

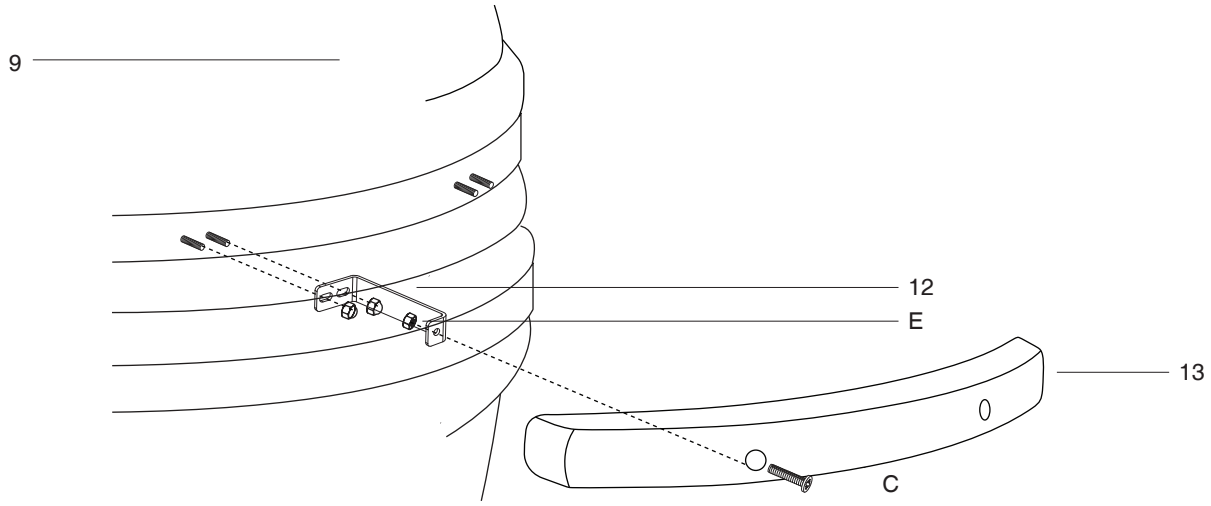
9
12
E
13
C

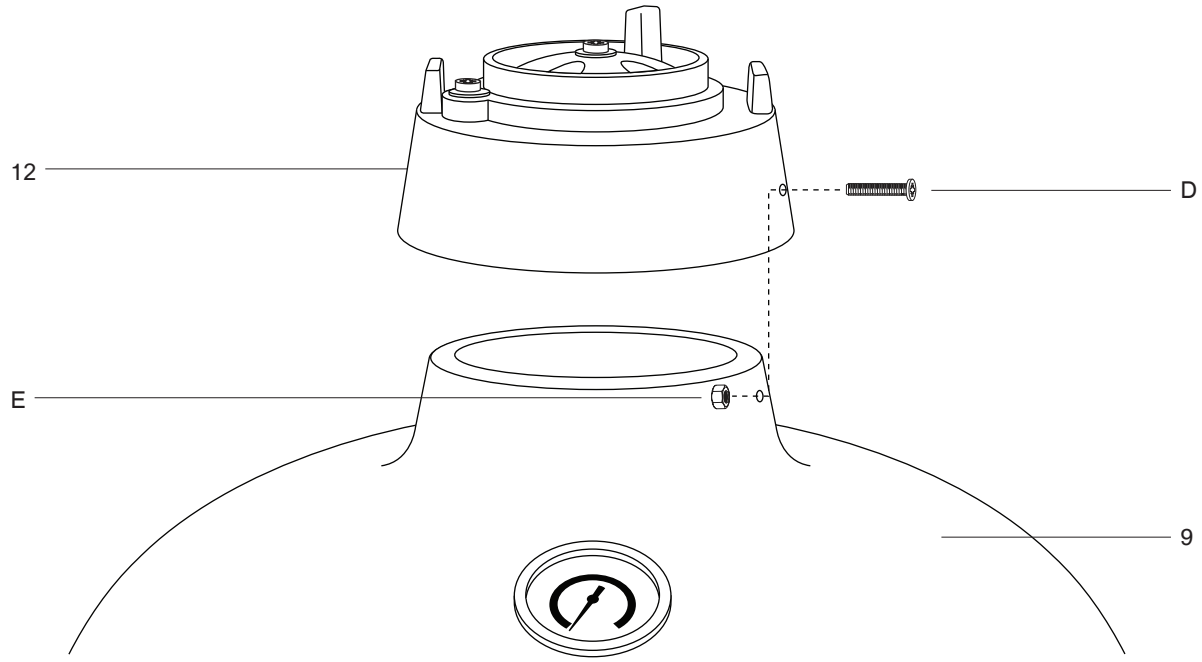
12
D
E
9

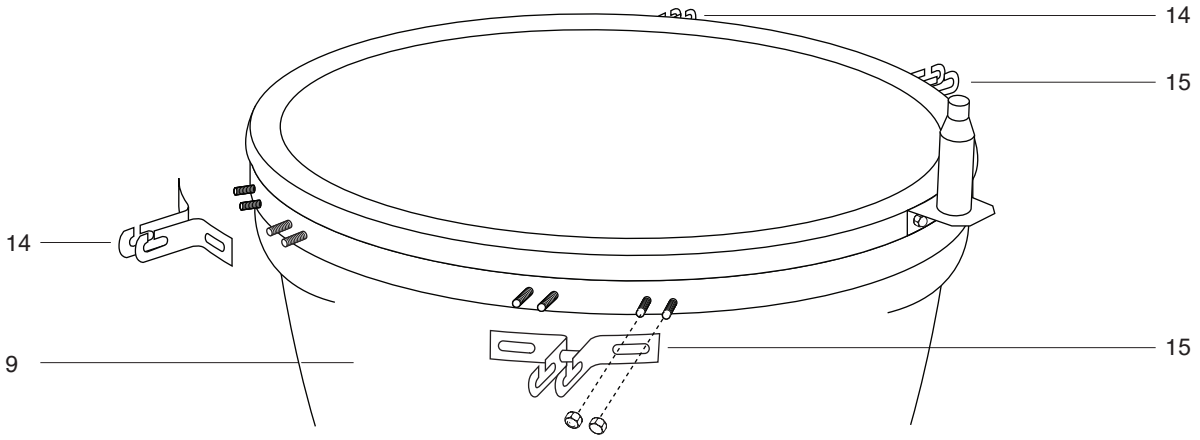
14
15
14
9
15

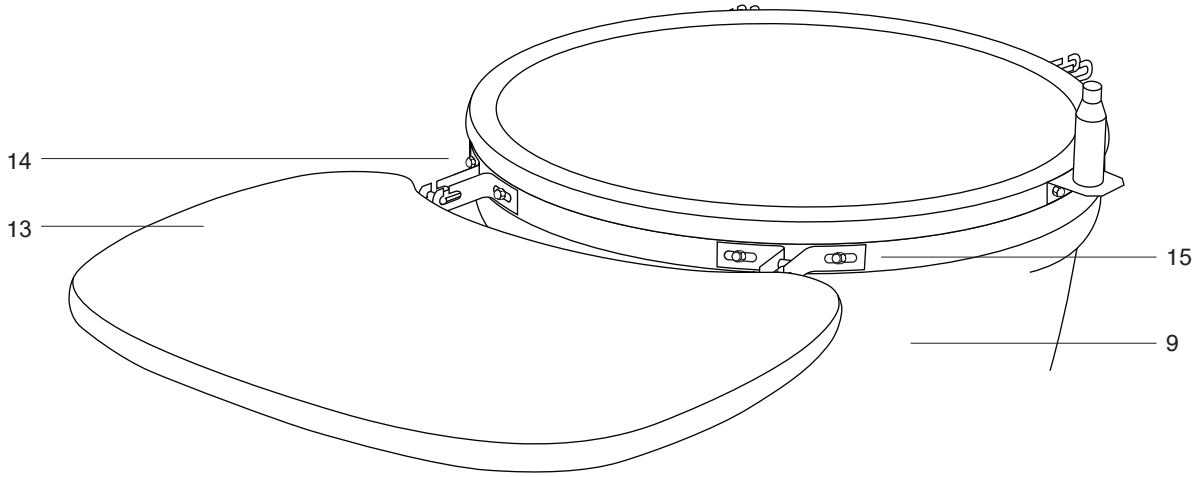
14
13
15
9

Accessories (Available for purchase separately)

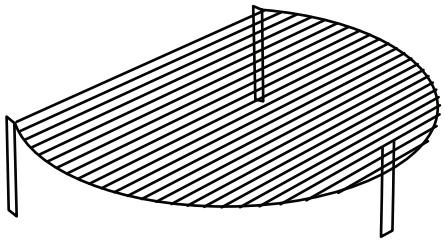

Raised Cooking Grid
Stainless steel extra grill for additional cooking space.

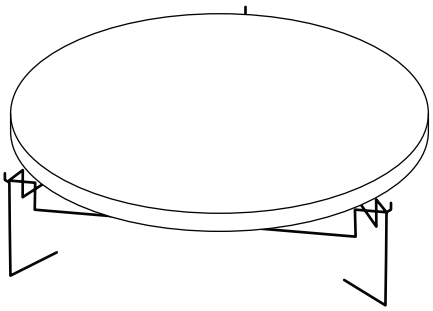

Pizza Stone with Support Frame
Essential accessory for evenly cooking chrispy pizzas, flat breads and other delights.

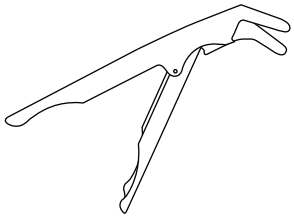

Clip Tool
Allows you to lift the pizza stone or cooking grills when they are too hot to handle.

Rain Cover
When the Kamado has cooled and is not in use, cover it with the Kamado raincover for extra protection.

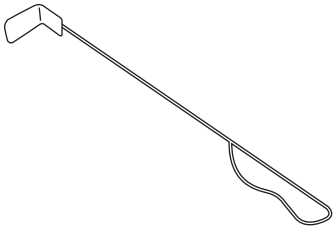

Ash Tool
Once your Kamado has burnt all its fuel and cooled down use this tool for removing the ash from the bottom.

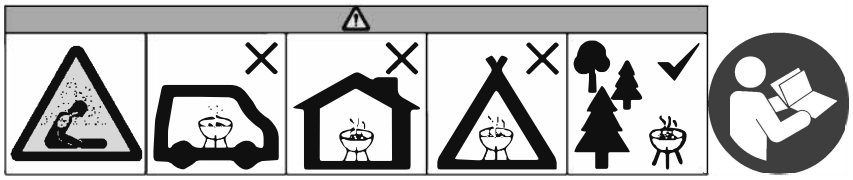

- Upon close inspection, the finish of your ceramic BBQ may appear to have crack lines. This is **NO** cracking of the ceramic. This is known as “crazing” and is caused by a different coefficient of expansion between the glaze finish and the clay. The spider-web pattern of “crazing” is different from a crack in the aspect that it cannot be felt on the surface, unless using a fingernail; however it does become more visually apparent when the surface is dusty or magnified. While this "crazing"

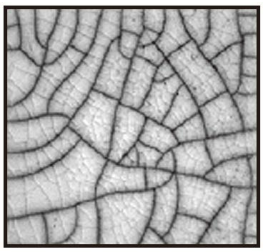

may appear as imperfections, crazing does not affect the performance of life span of your ceramic BBQ; therefore it can't be claimed as a warranty issue. The process of crazing effectively increased the toughness of the unit.

Long-term maintenance

- The wood side shelves should be covered when not in use and may require refinishing from time to time.
- Routinely check the spring assist band to make sure all the bolts are tight and secure.
- When moving the barbecue, ensure to unlock the castors first. Do not push to move. Pull from the back hinge instead of the handle in the front.
- Do not remove the fire bowl. The purpose of the fire bowl is to hold the lump charcoal and will continue to work even if it is cracked.